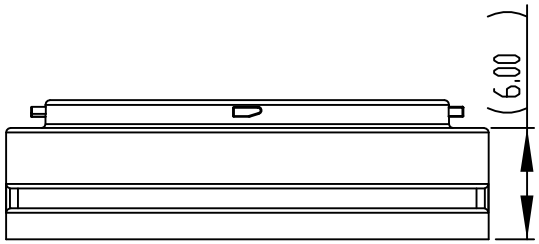

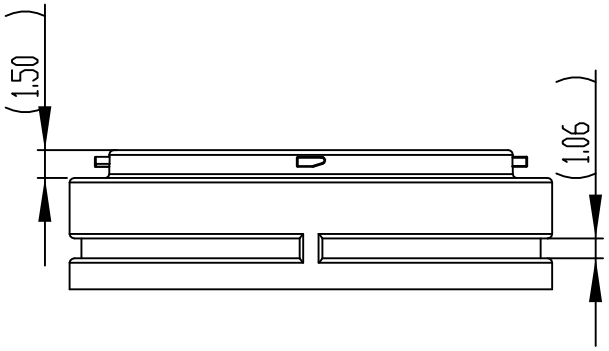

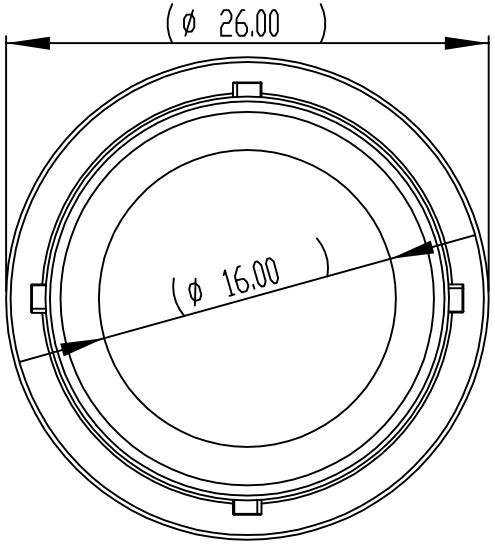

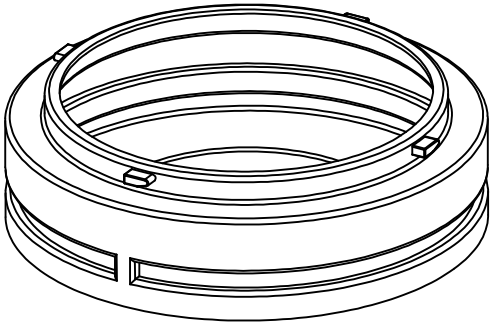

PROPRIETARY AND CONFIDENTIAL
THE INFORMATION CONTAINED IN THIS DRAWING IS THE SOLE PROPERTY OF ZABEL INDUSTRIES INTERNATIONAL LTD. ANY REPRODUCTION IN PART OR AS A WHOLE WITHOUT THE WRITTEN PERMISSION OF ZABEL INDUSTRIES INTERNATIONAL LTD. IS PROHIBITED.

NEXT ASSY	USED ON
APPLICATION	

DIMENSIONS ARE IN INCHES
TOLERANCES:
FRACTIONAL ±
ANGULAR: MACH ± BEND
TWO PLACE DECIMAL ±
THREE PLACE DECIMAL ±

MATERIAL: Polyprophylene

FINISH: --

SCALE: 1 : 10

	NAME	DATE
DRAWN	TNJ	01-22-02
CHECKED	TT	01-22-02
ENG APPR.		
MFG APPR.		
Q.A.		

COMMENTS:

QUANICS INCORPORATED

For updated AutoCad .dwg files
Visit our website
www.quanics.net

SIZE: A | DWG. NO.: RB-CTA-26x6 | REV.

SCALE: 1:20 | WEIGHT: | SHEET 1 OF 1