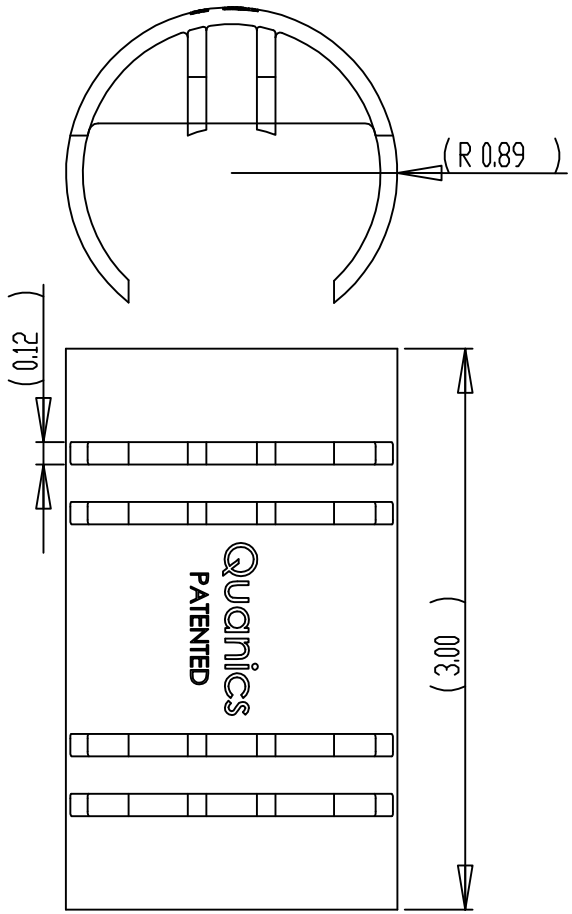


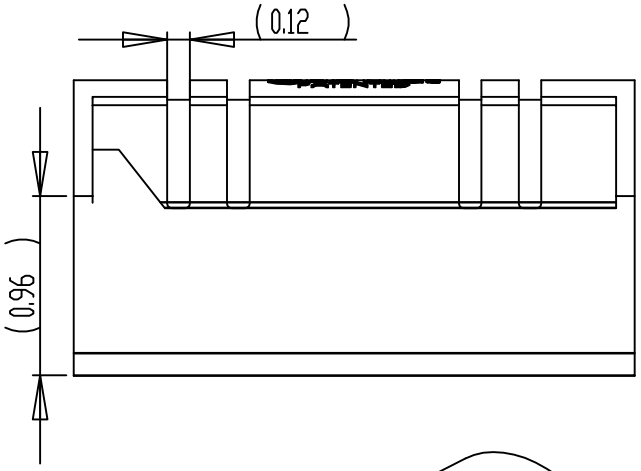


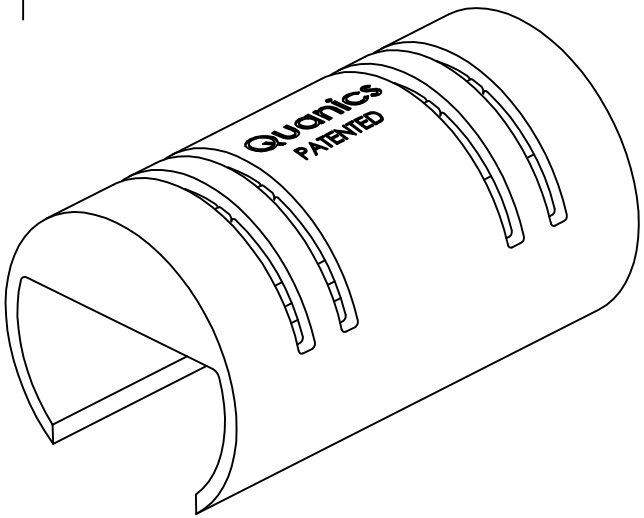


The PDS-ZDS-100 fits 1.00" pipe

| | | | | | |
|---|---|---|---|---|---|
| | | DIMENSIONS ARE IN INCHES<br>TOLERANCES:<br>FRACTIONAL ±<br>ANGULAR: MACH ± BEND ±<br>TWO PLACE DECIMAL ±<br>THREE PLACE DECIMAL ± | | NAME | DATE |
| | | | DRAWN | TNJ | 01-22-02 |
| | | | CHECKED | TT | 01-22-02 |
| | | | ENG APPR. | | |
| | | | MFG APPR. | | |
| | | MATERIAL | Q.A. | | |
| | | | COMMENTS: | | |
| NEXT ASSY | USED ON | FINISH -- | | | |
| APPLICATION | | FINISH 1 : 1 | | | |

Product(s) covered by one or more U.S. and/or International patents. Other U.S. and International patents may be pending.

QUANICS INCORPORATED

| SIZE | DWG. NO. | REV. |
|---|---|---|
| A | PDS-ZDS-100 | |
| | WEIGHT: | SHEET 1 OF 1 |