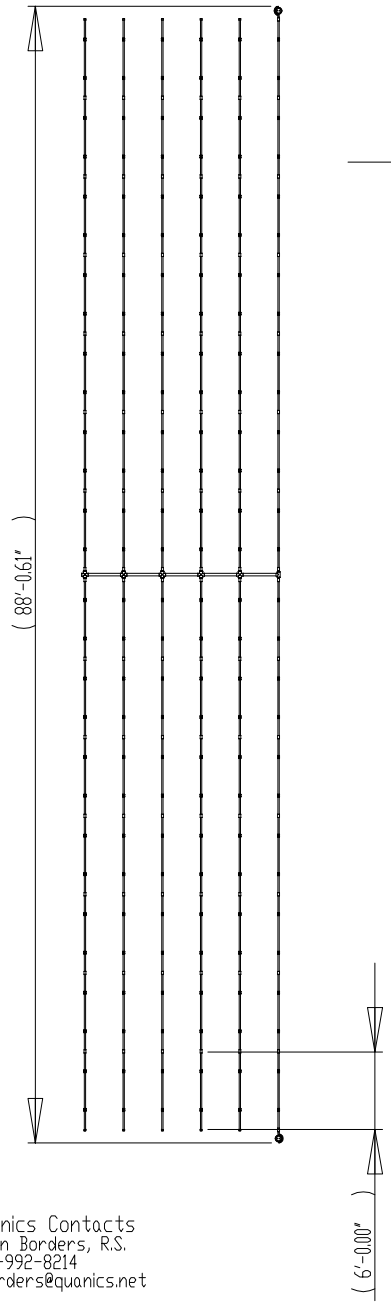

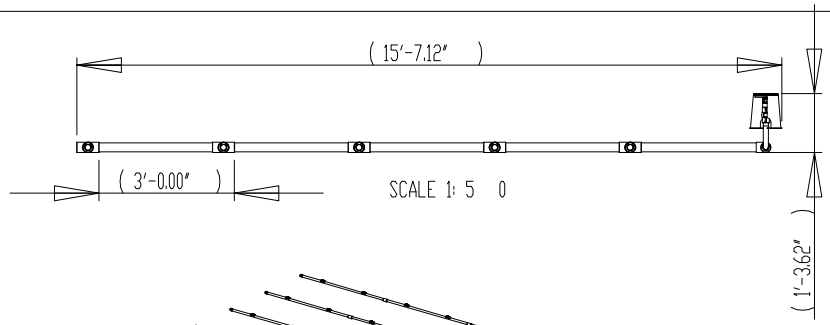

Drainfield S izing Specifications

500 linear feet treat up to 600gallons per day

Laterals

PDS-MND-60 0 drainfield is made of twelve 42' lines
Each line includes eight 6' sections
Each 6' section includes two orifices
Sweep assemblies at ends of last lines
Lines are on 3' centers

Orifice Specifications

Orifice diameter = 5/32"
# of orifices per line = 14
Orifices are 36" apart

Piping

Manifold = 1.5" SCH 40 PVC
Laterals = 1.0" SCH 40 PVC

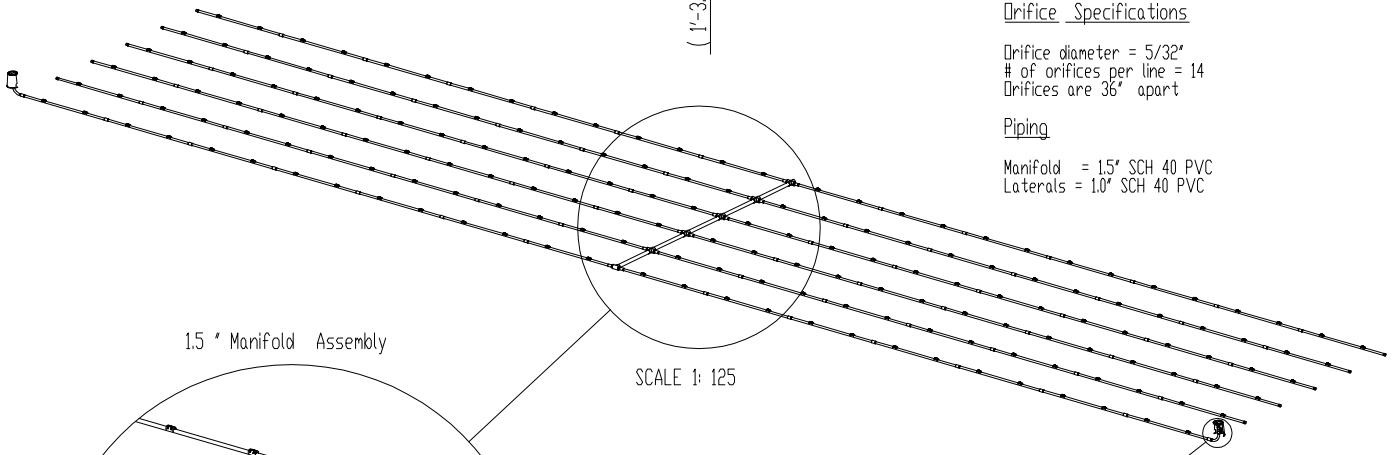

SCALE 1: 125

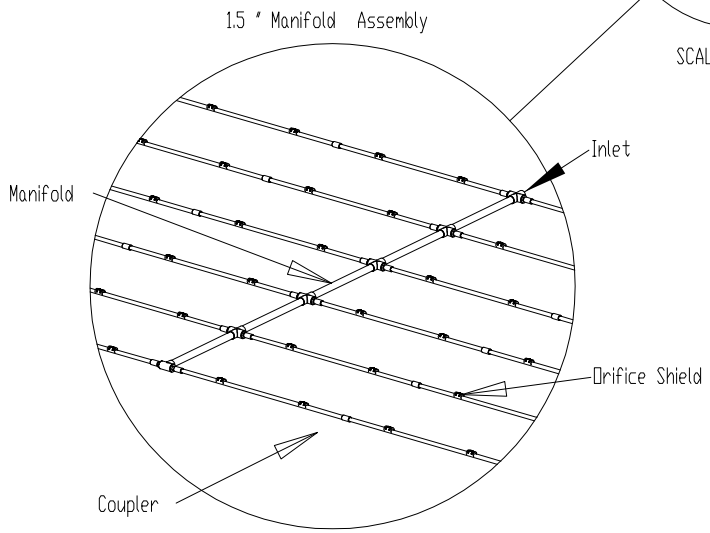

DETAIL A
SCALE 2 : 125

1" Sweep Assembly
Quanics Model # PDS-SA-1.0

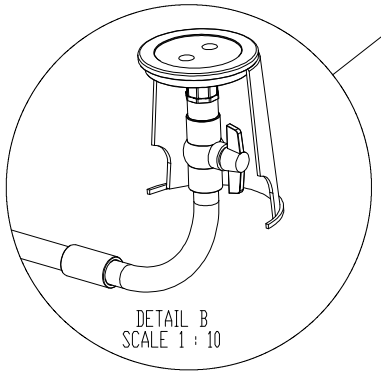

DETAIL B
SCALE 1 : 10

Quanics Contacts
Brian Borders, R.S.
502-992-8214
bborders@quanics.net

Tom Petty, P.G., R.E.H.S
615-289-4399
Tpetty@quanics.net

Kevin Sherman, P.E., Ph.D.
502-751-7258
ksherman@quanics.net

Product(s) covered by one or more U.S. and/or International patents. Other U.S. and International patents may be pending.

NEXT ASSY	USED ON
APPLICATION	

DIMENSIONS ARE IN INCHES
TOLERANCES:
FRACTIONAL ±
ANGULAR: MACH ± BEND ±
TWO PLACE DECIMAL ±
THREE PLACE DECIMAL ±

MATERIAL

FINISH --

SCALE 1 : 175

	NAME	DATE
DRAWN	TNJ	05-10-06
CHECKED	BB	05-10-06
ENG APPR.	KS	00-00-00
MFG APPR.	SG	05-10-06
Q.A.		

COMMENTS:

Quanics
Engineering Water Solutions ™

P.O. Box 1520
Crestwood KY 40014

www.quanics.net

SIZE	DESCRIPTION	REV.
A	PDS-MND -60 0	
	WEIGHT:	SHEET 1 OF 1