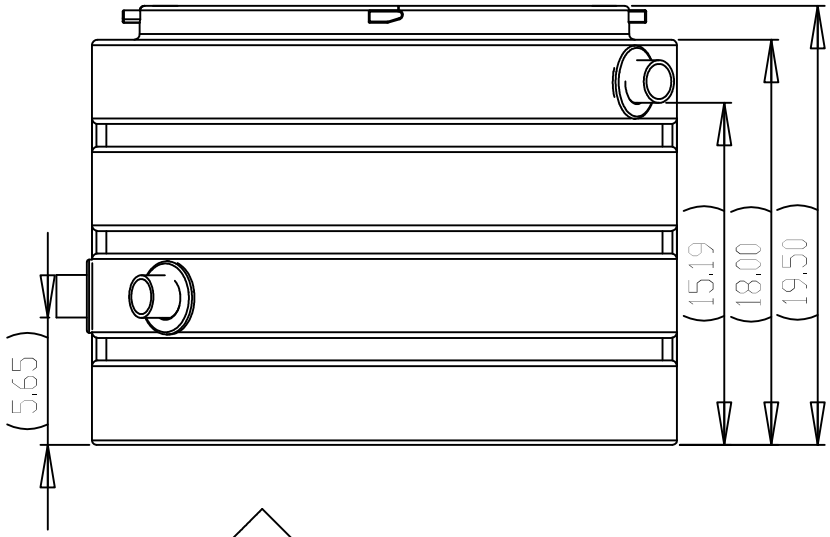

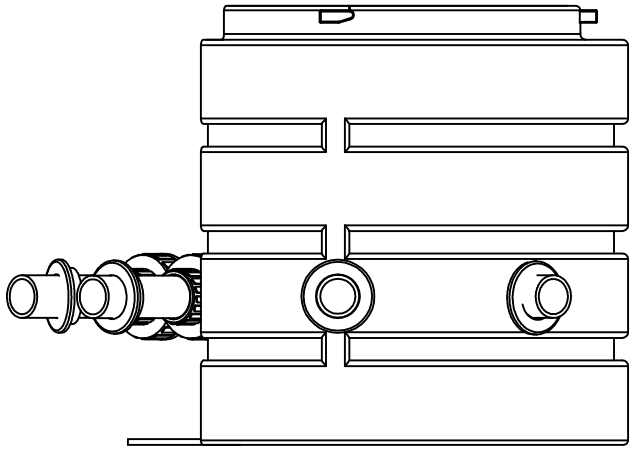

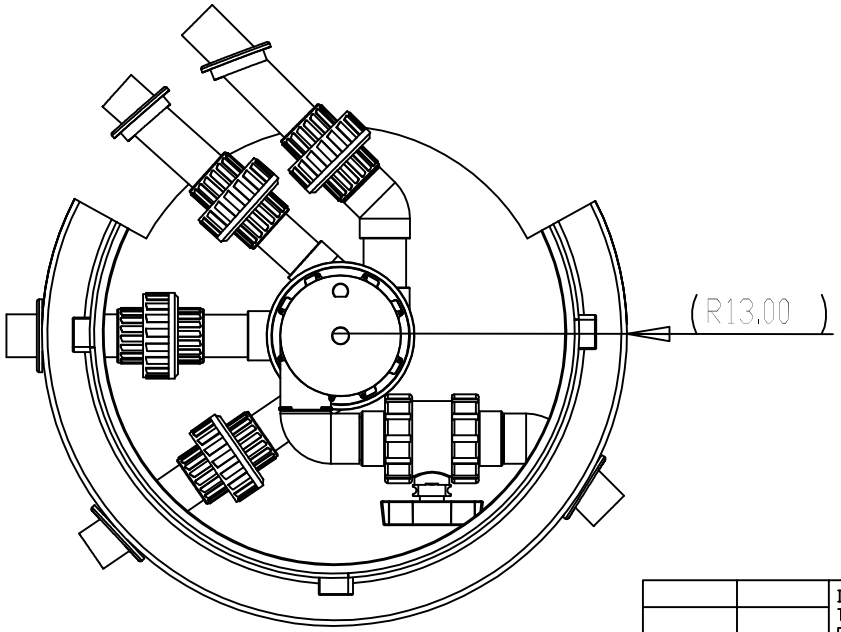

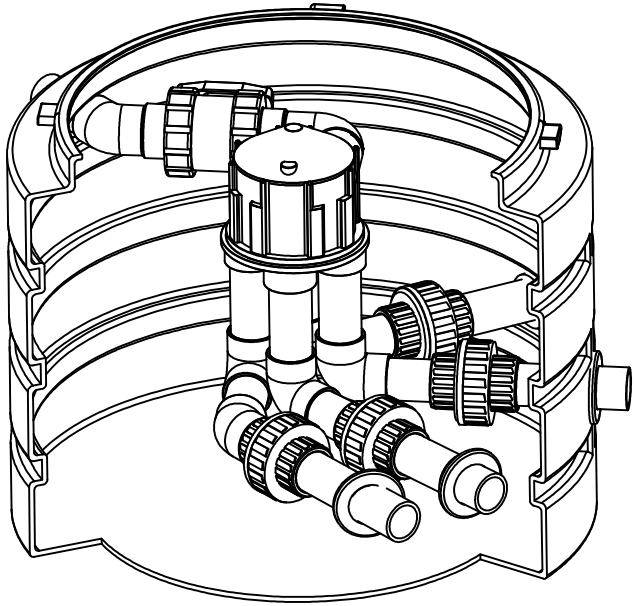

1-1/4" SCH 40 PVC Inlet and Outlets

Product(s) covered by one or more U.S. and/or International patents. Other U.S. and International patents may be pending.

NEXT ASSY	USED ON
APPLICATION	

DIMENSIONS ARE IN INCHES
TOLERANCES:
FRACTIONAL±
ANGULAR: MACH± BEND ±
TWO PLACE DECIMAL ±
THREE PLACE DECIMAL ±

MATERIAL

FINISH --

SCALE 1 : 8

	NAME	DATE
DRAWN	TNJ	04-01-03
CHECKED	TT	04-01-03
ENG APPR.		
MFG APPR.		
Q.A.		

COMMENTS:

QUANICS INCORPORATED

For updated AutoCad .dwg files
Visit our website
www.quanics.net

FILE NAME PDS-DV-6-4-4-AP

WEIGHT:

SHEET 1 OF 1