ZONE	REV.	REVISIONS DESCRIPTION	DATE	APPROVED

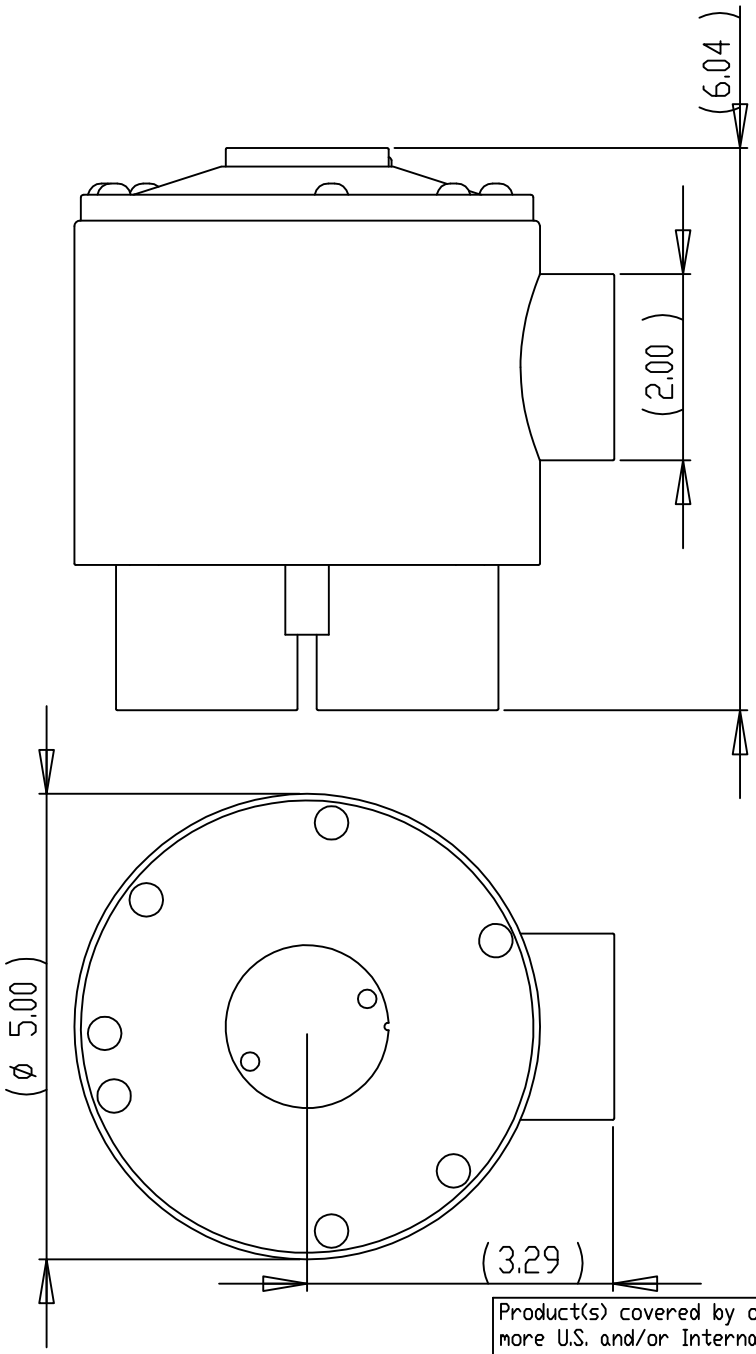

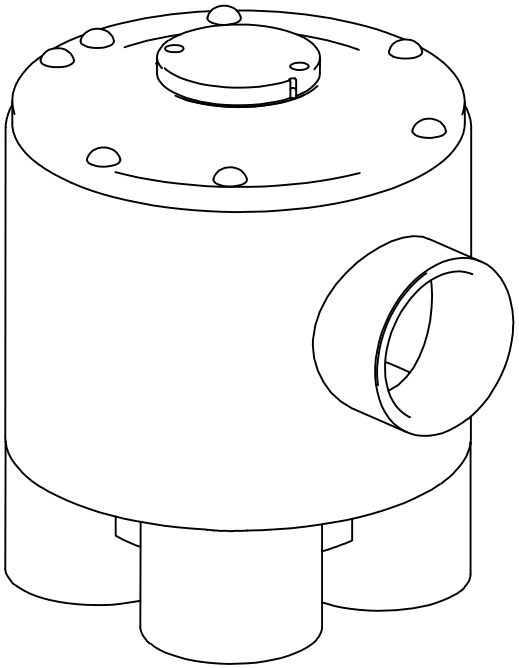

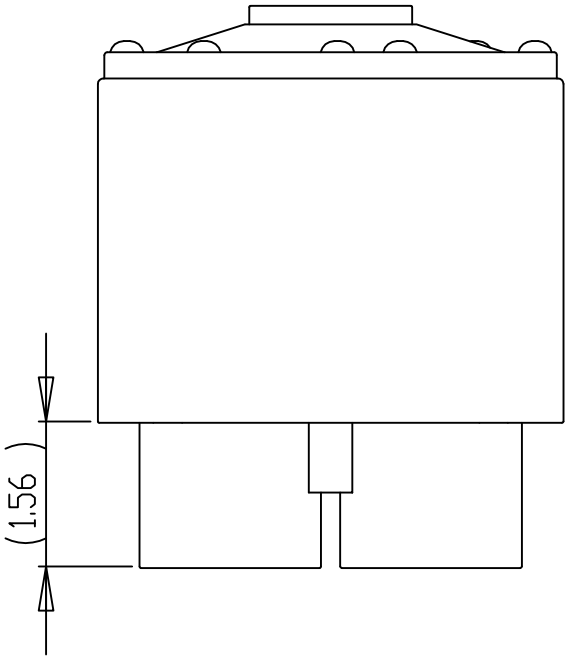

Product(s) covered by one or more U.S. and/or International patents. Other U.S. and International patents may be pending.

NEXT ASSY	USED ON
APPLICATION	

DIMENSIONS ARE IN INCHES
TOLERANCES:
FRACTIONAL ±
ANGULAR: MACH ± BEND ±
TWO PLACE DECIMAL ±
THREE PLACE DECIMAL ±

MATERIAL

FINISH --

DO NOT SCALE DRAWING

	NAME	DATE
DRAWN	TNJ	01-22-02
CHECKED	TT	01-22-02
ENG APPR.		
MFG APPR.		
Q.A.		

COMMENTS:

QUANICS INCORPORATED

SIZE	DWG. NO.	REV.
A	PDS-DV-4	
	WEIGHT:	SHEET 1 OF 1