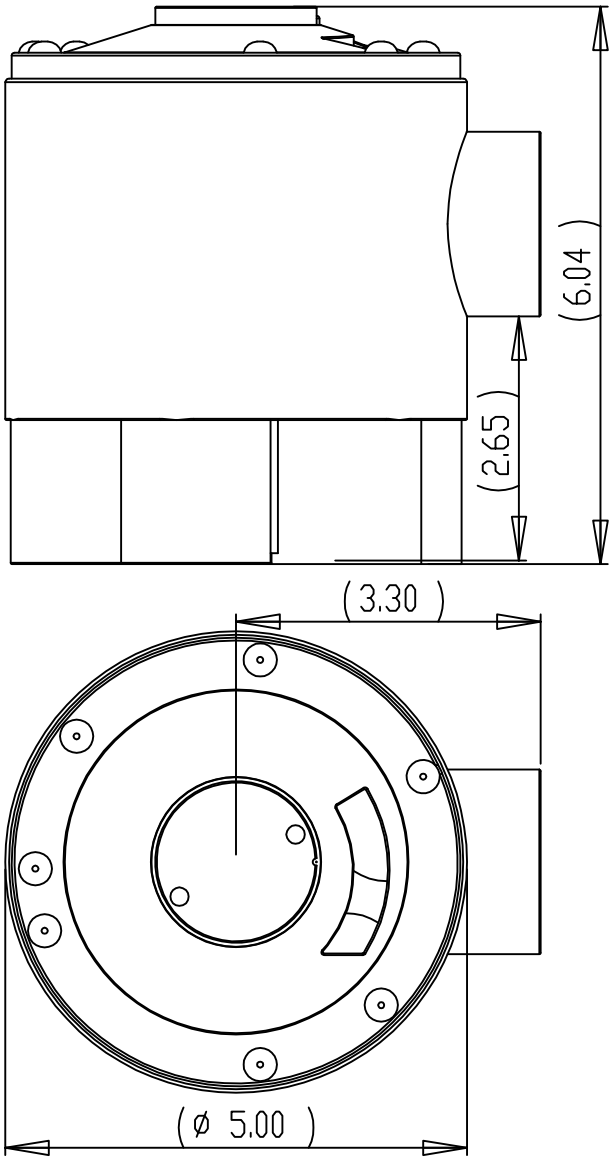

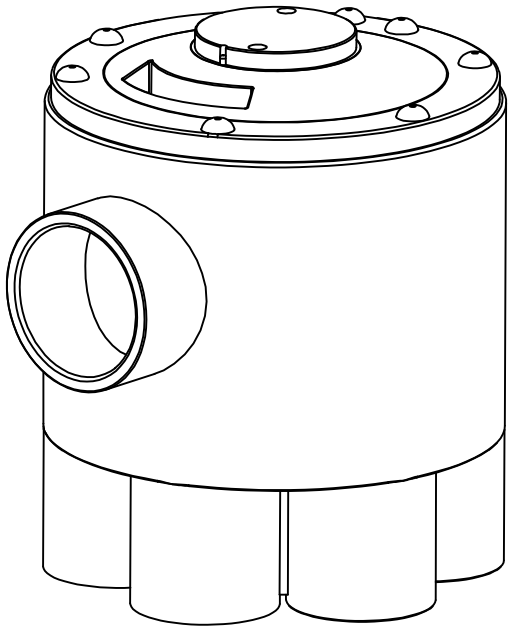

		DIMENSIONS ARE IN INCHES TOLERANCES: FRACTIONAL± ANGULAR: MACH± BEND ± TWO PLACE DECIMAL ± THREE PLACE DECIMAL ±		NAME	DATE
			DRAWN	TNJ	01-22-02
			CHECKED	TT	01-22-02
			ENG APPR.		
			MFG APPR.		
		MATERIAL	Q.A.		
			COMMENTS:		
NEXT ASSY	USED ON	FINISH --			
APPLICATION		SCALE 1 : 2			

QUANICS INCORPORATED

SIZE	DWG. NO.	REV.
A	PDS-DV-4-6	
	WEIGHT:	SHEET 1 OF 1

Product(s) covered by one or more U.S. and/or International patents. Other U.S. and International patents may be pending.