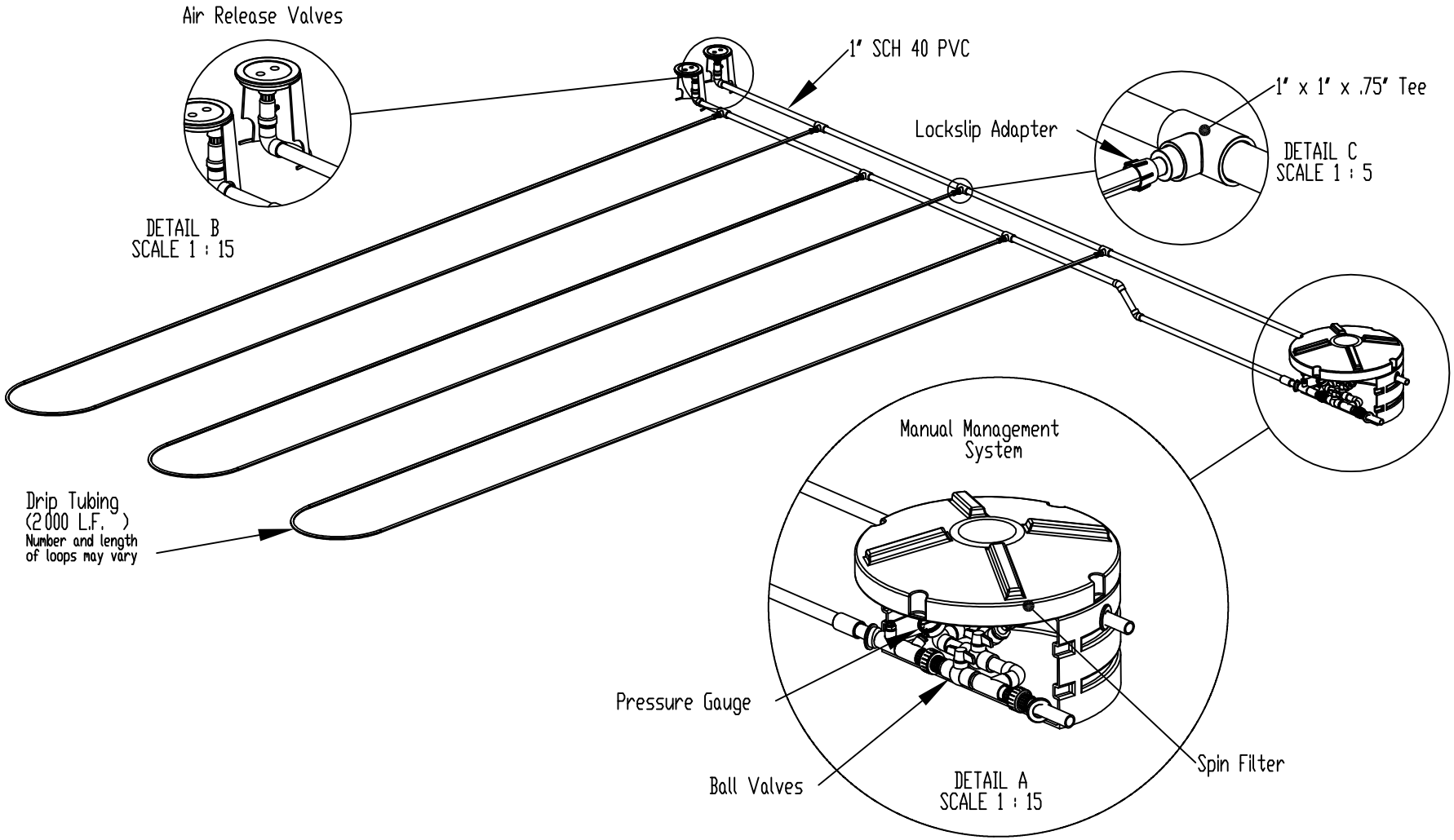

Parts Included:
PDS-DT-24-PC (20 00 ft.)
PDS-LF-A (4 0)
PDS-CF-IC (15)
PDS-VB-100 (2)
PDS-AVB (2)
PDS-MS-1-MAN (1)

Product(s) covered by one or more U.S. and/or International patents. Other U.S. and International patents may be pending.

NEXT ASSY	USED ON
APPLICATION	

DIMENSIONS ARE IN INCHES
TOLERANCES:
FRACTIONAL ±
ANGULAR: MACH ± BEND ±
TWO PLACE DECIMAL ±
THREE PLACE DECIMAL ±

MATERIAL

FINISH --

SCALE 1 : 45

	NAME	DATE
DRAWN	TNJ	11-14-03
CHECKED	BB	11-14-03
ENG APPR.		
MFG APPR.		
Q.A.		

COMMENTS:

QUANICS INCORPORATED

For updated AutoCad .dwg files
Visit our website

www.quanics.net

FILE NAME Single Zone Drip Field Assembly

WEIGHT:

SHEET 1 OF 1