ZONE	REV.	REVISIONS DESCRIPTION	DATE	APPROVED

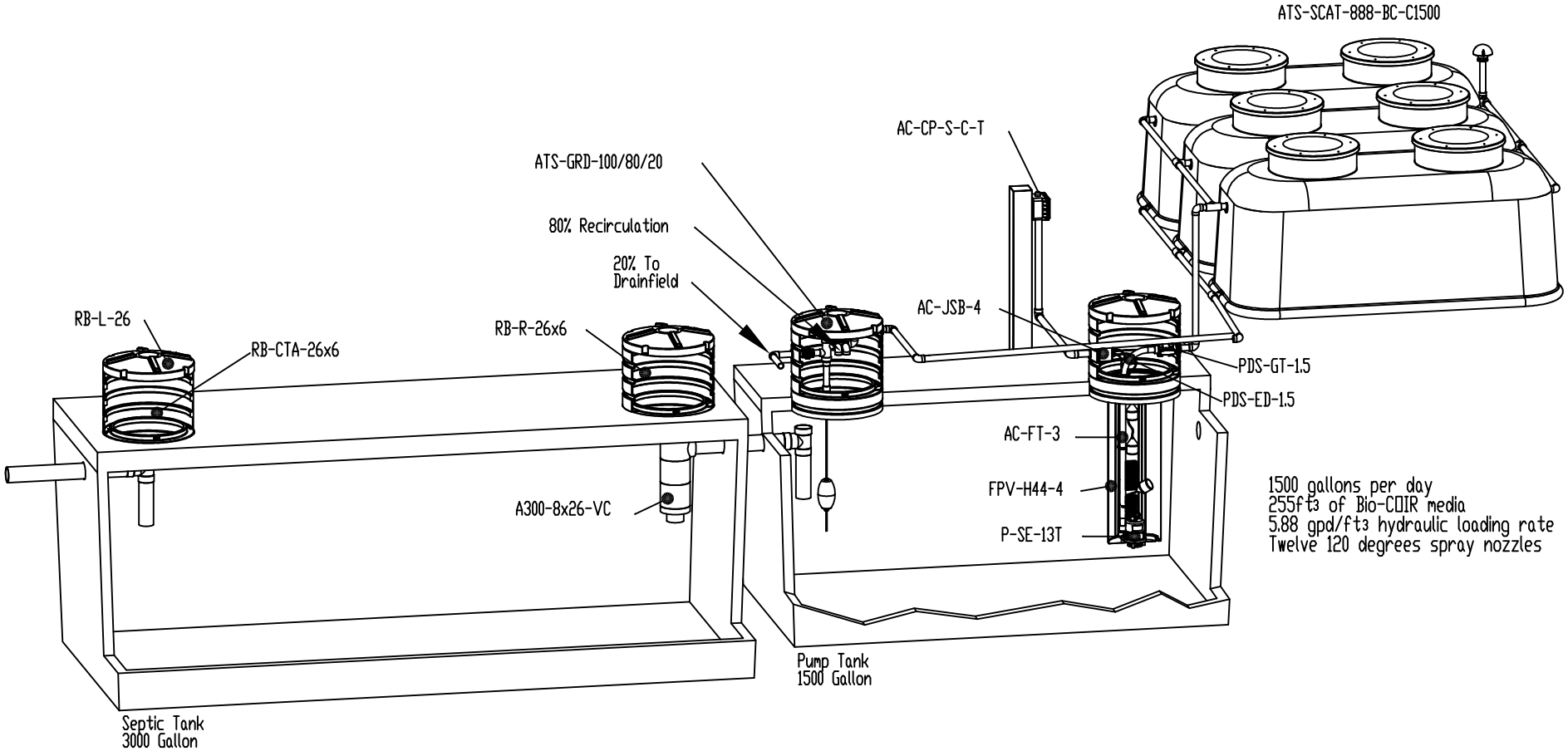

Parts Included:

ATS-SCAT-888-BC-C1500
A300-8x26-VC
FPV-H44-4
P-SE-13T
PDS-ED-1.5
PDS-GT-1.5 (2x)
AC-FT-3
AC-JSB-4
AC-CP-S-C-T
ATS-GRD-100/80/20
RB-CTA-26x6 (4x)
RB-R-26x18 (3x)
RB-L-26 (3x)

Product(s) covered by one or more U.S. and/or International patents. Other U.S. and International patents may be pending.

NEXT ASSY	USED ON
APPLICATION	

DIMENSIONS ARE IN INCHES
TOLERANCES:
FRACTIONAL ±
ANGULAR: MACH ± BEND
TWO PLACE DECIMAL ±
THREE PLACE DECIMAL ±

MATERIAL

FINISH --

SCALE 1 : 45

	NAME	DATE
DRAWN	TNJ	08-08-05
CHECKED	BB	08-08-05
ENG APPR.		
MFG APPR.		
Q.A.		

COMMENTS:

QUANICS INCORPORATED

SIZE	DWG. NO.	REV.
A	ATS-SCAT-888-BC-C1500	

WEIGHT: SHEET 1 OF 1