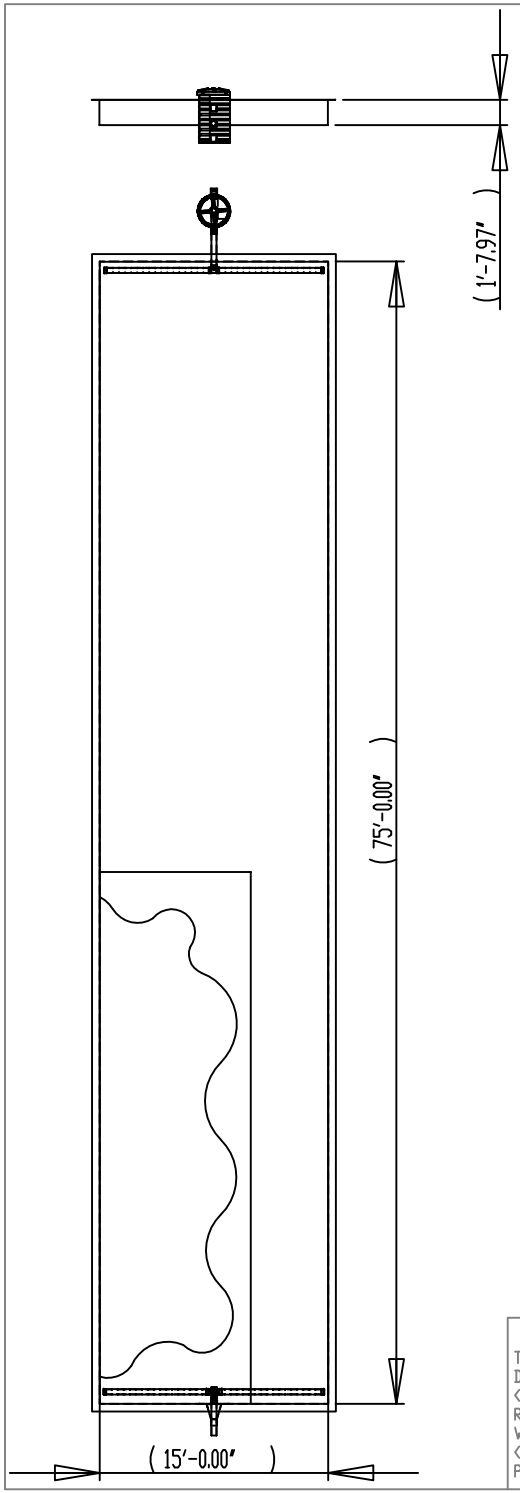

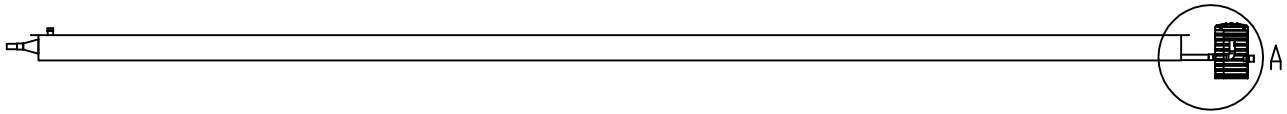

Water level control device

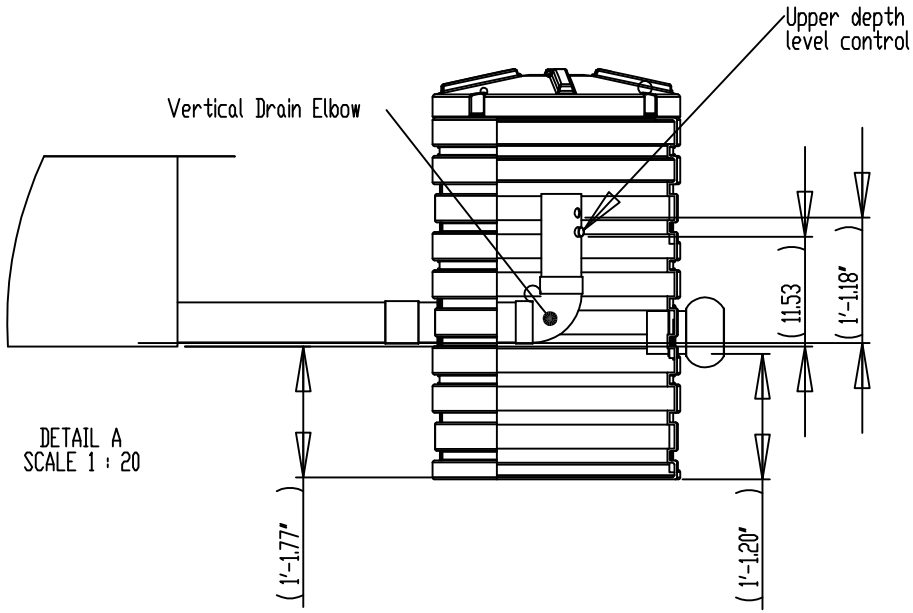

DETAIL A
SCALE 1 : 20

Parts List:
Septic tank access riser
Effluent Filter
30 mil PVC liner
4" boot kits
Gravity manifold
Water lever control device

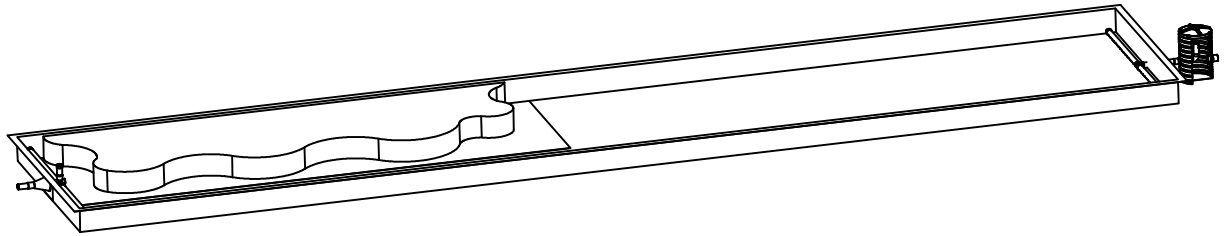

PROPRIETARY AND CONFIDENTIAL
THE INFORMATION CONTAINED IN THIS DRAWING IS THE SOLE PROPERTY OF <INSERT COMPANY NAME HERE>. ANY REPRODUCTION IN PART OR AS A WHOLE WITHOUT THE WRITTEN PERMISSION OF <INSERT COMPANY NAME HERE> IS PROHIBITED.

NEXT ASSY	USED ON
APPLICATION	

DIMENSIONS ARE IN INCHES
TOLERANCES:
FRACTIONAL ±
ANGULAR: MACH ± BEND ±
TWO PLACE DECIMAL ±
THREE PLACE DECIMAL ±

MATERIAL --

FINISH --

SCALE 1 : 150

	NAME	DATE
DRAWN	TNJ	05-12 -06
CHECKED	BB	05-12 -06
ENG APPR.	KS	05-15-06
MFG APPR.	N/A	00-00-00
Q.A.		

COMMENTS:
System treatment specs :
Loading Rate:
.87 gal/ft2/day = 1200 gpd

QUANICS INCORPORATED

P.O. Box 1520
Crestwood KY 40014

www.quanics.net

SIZE A | DWG. NO. ATS-PKG-CW-15x75 | REV.

WEIGHT: | SHEET 1 OF 1