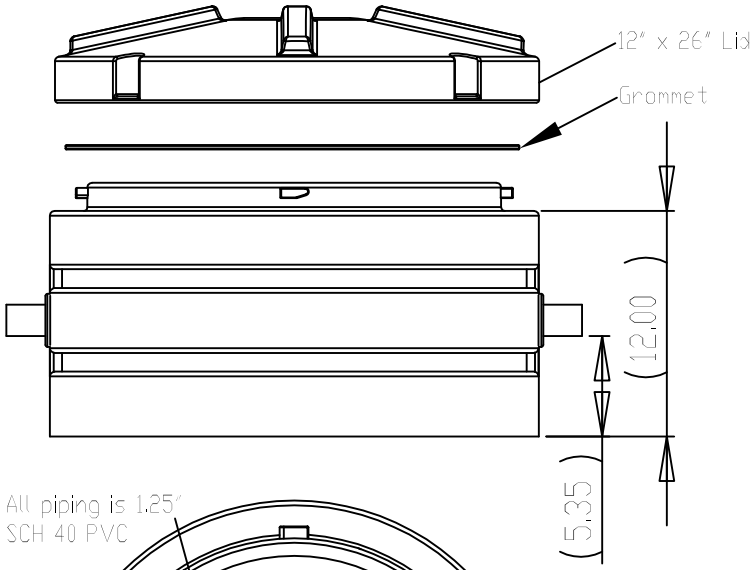

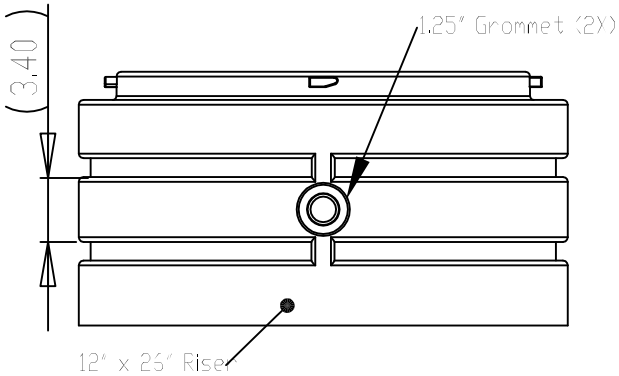

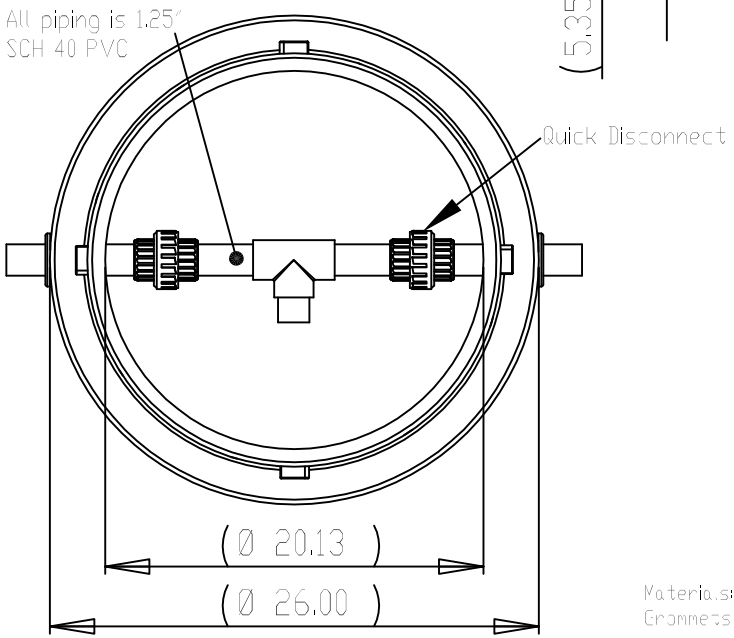

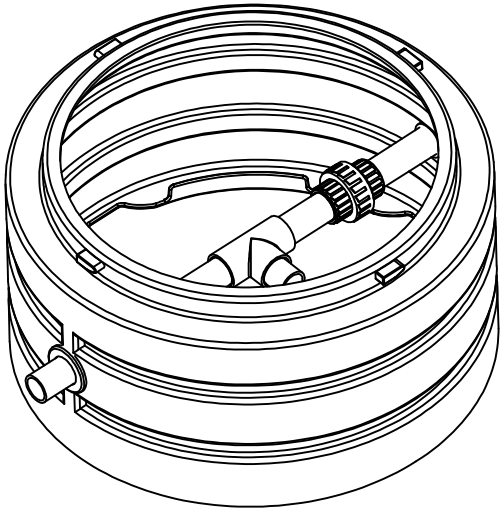

Materials: Riser Lid = Polyethylene, Water-tight gasket = Neoprene, Security Screws = Stainless Steel, Grommets = Rubber

				NAME	DATE	QUANICS INCORPORATED
		DIMENSIONS ARE IN INCHES TOLERANCES: FRACTIONAL ± ANGULAR: MACH ± BEND ± TWO PLACE DECIMAL ± THREE PLACE DECIMAL ±	DRAWN	TNJ	04-21-03	
			CHECKED	TT	04-21-03	
			ENG APPR.			
			MFG APPR.			
		MATERIAL	Q.A.			
			COMMENTS:			
NEXT ASSY	USED ON	FINISH --				FILE NAME ATS-GRD-50/50 Assembly
APPLICATION		SCALE 1 : 10				WEIGHT: SHEET 1 OF 1

Product(s) covered by one or more U.S. and/or International patents. Other U.S. and International patents may be pending.