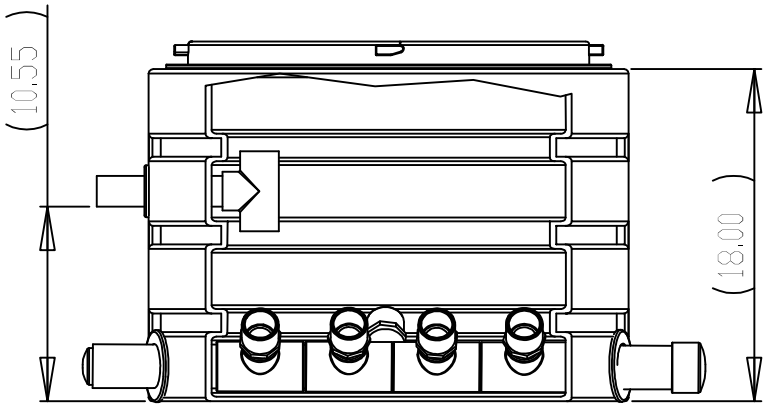

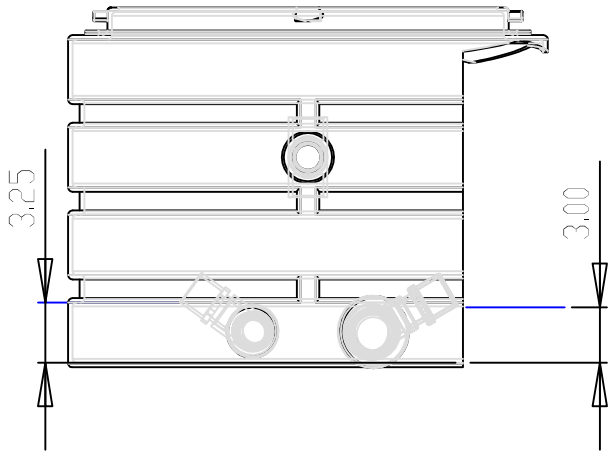

Disposal field return line must be adjusted to 3.25" from bottom of basin for proper 20% recirculation to disposal field.

Septic tank return line nozzels should be adjusted to 3" from bottom of basin for proper 80% recirculation back to septic tank.

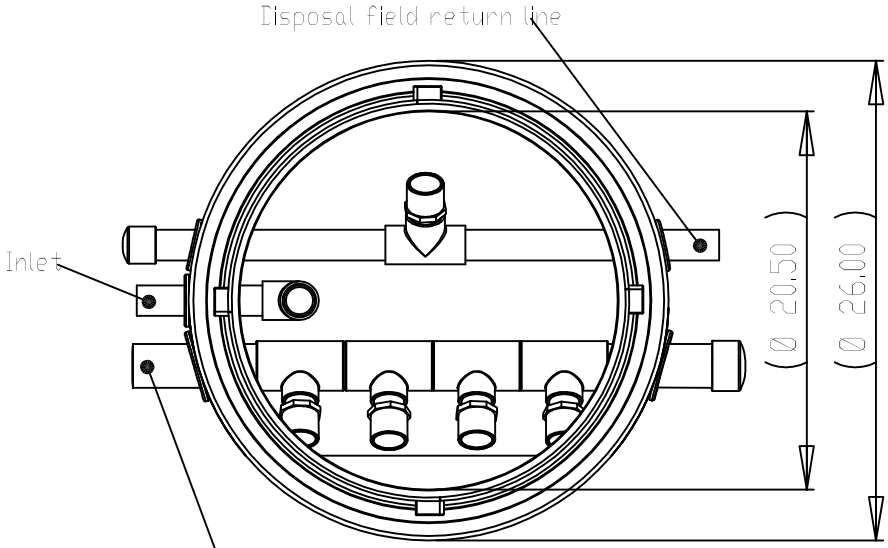

				NAME	DATE
		DIMENSIONS ARE IN INCHES			
		TOLERANCES:	DRAWN	TNJ	[illegible]
		FRACTIONAL ±	CHECKED	TT	[illegible]
		ANGULAR: MACH ± BEND ±	ENG APPR.		
		TWO PLACE DECIMAL ±	MFG APPR.		
		THREE PLACE DECIMAL ±	Q.A.		
		MATERIAL	COMMENTS:		
		FINISH --			
NEXT ASSY	USED ON				
APPLICATION		SCALE 1:10			

Product(s) covered by one or more U.S. and/or International patents. Other U.S. and International patents may be pending.

QUANICS INCORPORATED

For updated AutoCad .dwg files
Visit our website
www.quanics.net

SIZE	DWG. NO.	REV.
A	ATS-GRD-4/1	
	WEIGHT:	SHEET 1 OF 1