ZONE	REV.	REVISIONS DESCRIPTION	DATE	APPROVED

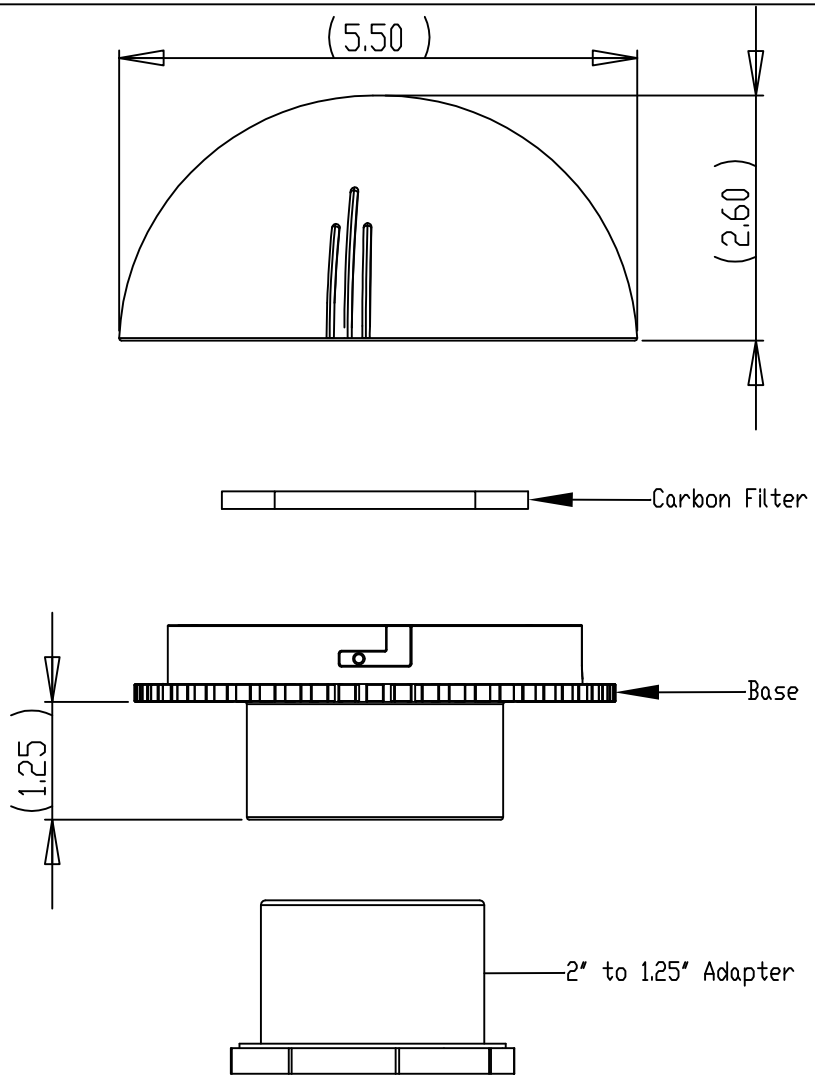

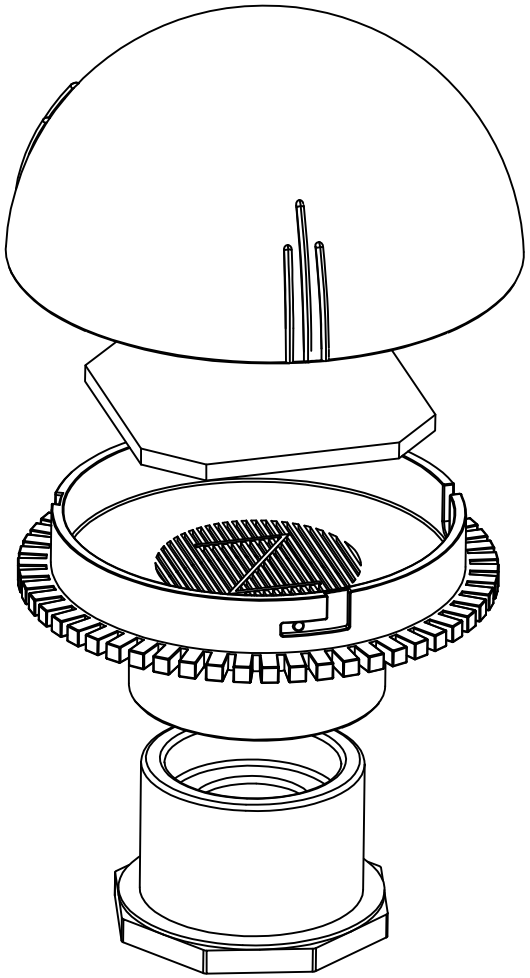

Quanics Contacts
Brian Borders, R.S.
502-992-8214
bborders@quanics.net

Tom Petty, P.G., R.E.H.S
615-289-4399
Tpetty@quanics.net

Kevin Sherman, P.E., Ph.D.
502-751-7258
ksherman@quanics.net

Product(s) covered by one or more U.S. and/or International patents. Other U.S. and International patents may be pending.

NEXT ASSY	USED ON
APPLICATION	

DIMENSIONS ARE IN INCHES
TOLERANCES:
FRACTIONAL ±
ANGULAR: MACH ± BEND
TWO PLACE DECIMAL ±
THREE PLACE DECIMAL ±

MATERIAL

FINISH --

SCALE 1 : 3

	NAME	DATE
DRAWN	TNJ	02-07-06
CHECKED	BB	02-07-06
ENG APPR.	KS	02-08-06
MFG APPR.		
Q.A.		

COMMENTS:

Quanics
Engineering Water Solutions™

P.O. Box 1520, Crestwood KY. 40014

SIZE A | DWG. NO. ATS-CF-1.25/2.0 Assembly | REV.

WEIGHT: | SHEET 1 OF 1